Data sheet DS/TB84EC–EN Rev. C

TB84EC
Conductivity transmitter
4-Electrode

Hazardous area rated transmitter compatible with a wide range of sensors (including TB4)



Simple smart key menu programming
— Variable process display: mS/cm and mS/cm, concentration, and six-character user-defined including percent, ppm and ppb

Two fully programmable isolated outputs
— Zero to 20 mA and four to 20 mA

Three fully programmable relay outputs

Eleven modes of temperature compensation
— Includes three for pure water and four for specified chemicals

Adjustable damping

Hold output function
— Holds all outputs or any individual output

Programmable security codes and configuration lockout

Universal power supply
— 120/240 VAC, 50/60 Hz. Voltage range is 94 to 276 VAC

NEMA 4X/IP65 housing
— Cast aluminum with corrosion resistant polyester powder coat finish

FM and CSA non-incendive agency approvals
— CE Mark

Power and productivity
for a better world™

Advantage Series™ Conductivity Analyzer

The ABB TB84EC Advantage Conductivity Analyzer is a unique and advanced microprocessor-based instrument. Smart keys on the front panel provide for local programming of all analyzer functions. Easy-to-follow instructions appear above each smart key. A secondary display clearly defines each menu option during analyzer programming. During normal operation the secondary display shows several useful parameters. This innovative, user-friendly interface provides for straightforward analyzer configuration and calibration. Standard outputs include two isolated analog (current) outputs and three relay outputs. The analog outputs can be configured for the PV (process variable) and/or temperature. The relay outputs can be configured for the PV, temperature, diagnostics, cycle timer controller, or sensor cleaner.

The TB84EC analyzer is compatible with all ABB four-electrode conductivity sensors. These patented sensors provide worry-free measurement by compensating for all sensor fouling that might affect sensor accuracy. The analyzer provides notification should sensor fouling become so severe as to affect accuracy. Sensor diagnostics include unique ground loop detection, fouled or dirty sensor, and other features.

The TB84EC analyzer meets current CE and NEMA 4X/IP65 requirements.

Four-Electrode Sensor Compatibility

The TB84EC analyzer accepts inputs from all ABB patented four-electrode sensors. A menu choice during configuration makes changing from one sensor group to another easy. No jumpers or manual adjustments are required.

Table 1

Group	Ranges
Cell constant A	0 to 199.9 µS/cm, 0 to 1,999 µS/cm 0 to 19.99 mS/cm, 0 to 199.9 mS/cm 0 to 1,999 mS/cm
Cell constant B	0 to 19.9 µS/cm, 0 to 199.9 µS/cm 0 to 1,999 µS/cm

Basic or Advanced Programming

The Basic or Advanced programming mode can be chosen at the time of purchase. The Basic mode has configuration choices common to conductivity analyzers. The Advanced mode has an expanded set of functions intended for complex applications. Separating the Basic and Advanced modes simplifies setup and calibration activities. The added choices are:

- Toggle between Basic or Advanced programming mode
- Concentration analyzer: zero to 15-percent sodium hydroxide (NaOH), zero to 20-percent sodium chloride (NaCl), zero to 18-percent hydrochloric acid (HCl), zero to 20-percent sulfuric acid (H_2SO_4), user-defined through a six-point conductivity versus concentration linear curve fit where output follows concentration. Engineering units are %, ppm, ppb, and user-defined.
- Temperature compensation types: Zero to 15-percent sodium hydroxide (NaOH), zero to 20-percent sodium chloride (NaCl), zero to 18-percent hydroxchloric acid (HCl), zero to 20-percent sulfuric acid (H_2SO_4), pure water neutral salt, pure water trace base, pure water trace acid, user-defined function generator, solution coefficient (zero to 9.99 percent per degree Celsius).
- Analog pulse diagnostic output.
- Expanded relay functions and flexibility.

Concentration

The concentration configuration has four preprogrammed conductivity to concentration curves. They are: zero to 15-percent sodium hydroxide (NaOH), zero to 20-percent sodium chloride (NaCl), zero to 18-percent hydrochloric acid (HCl) and zero to 20-percent sulfuric acid (H_2SO_4). Additionally, the analyzer allows the freedom to program conductivity to concentration curves via a five-segment (six-point) function generator. This increases accuracy by allowing the programming of exact curve breakpoints. Most concentration programs force curve fitting to percent concentration values divisible by five only.

Analog Outputs

The analyzer has two isolated analog outputs (AO1 and AO2). Each is user-configurable as either a zero to 20 or a four to 20-milliampere signal. AO1 is dedicated to the PV while AO2 is configurable for either the PV or temperature. A two-point calibration method applies to both analog outputs. This allows adjustment of the analog outputs to compensate for other devices in the loop that may not be calibrated. Entering the PV or temperature endpoints in reverse order allows for reverse-acting outputs.

A capacitive type lag, applied via the damping function, is useful in process environments where noise is present. Damping is supported for both analog outputs and the displayed PV, and has a maximum value of 99.9 seconds. One damping value affects both analog outputs and the displayed PV in basic configurations. Individual damping values affect each analog output and the displayed PV in advanced configurations.

Relay Outputs

The analyzer has three relay outputs available (RO1, RO2, RO3). Each is jumper selectable as either NO (normally open) or NC (normally closed). A corresponding relay icon appears on the display when a relay activates. The functionality of each relay output depends on the configuration mode. Table 2 shows the possible functionality of each relay output for Basic and Advanced configurations. Advanced programming allows all function choices shown in Table 2 for each of the three relay outputs.

Table 2. Relay Output Functionality[1]

Function	RO1		RO2		RO3	
	Basic	Adv	Basic	Adv	Basic	Adv
High or low PV alarm	•	•	•	•	•	•
High or low temperature alarm (ºC or ºF)		•	•	•	•	•
Diagnostics alarm		•		•	•	•
High or low cycle timer		•		•		•
Sensor cleaner[2]		•		•		•

Notes:

1. • = available

2. If a relay output has been configured as a sensor cleaner, no other relay output can be used for this function

High and low alarms can be chosen for the PV and temperature in either degrees Celsius or degrees Fahrenheit. The diagnostic relays can be linked to sensor diagnostics, analyzer diagnostics, or all diagnostic conditions. The high and low cycle timer has adjustable set points, cycle time, and on time. This feature works best with processes that have poor mixing or a long lag or dead time. The cycle timer allows a waiting period to see the results of chemical addition by interrupting the feed. The sensor cleaner feature provides for cycle time, on time, and recovery time programming. This makes set up and operation of the analyzer with the ABB hydraulic sensor cleaner or Model TB18 Safe-T-Clean® Sensor Valve easy and troublefree.

Diagnostics

The TB84EC analyzer constantly monitors both the sensor and the analyzer. This helps to ensure reliability and accuracy. Upon detection of a diagnostic condition, the analyzer provides diagnostic notification by flashing a *FAULT* icon on the display and supplying a pulse on AO1 (if activated). Pressing the *FAULT info* smart key stops the icon from flashing and provides, on the secondary display, a short description and fault code. The *FAULT* icon remains on until resolution of the problem. Sensor faults that activate the diagnostic notification are:

- Fouled or dirty sensor.
- Shorted or open temperature compensator.
- Ground loop detection (patent pending).

The user can turn the diagnostics on or off.

Hold Output

The analyzer has a hold output state that improves plant safety and process integrity during maintenance and calibration. When activated, the *HOLD* icon appears at the top of the display. Upon release of the hold state, the *HOLD* icon disappears. When the sensor cleaner option is chosen, the analyzer provides the option of holding all analog and relay outputs during the cleaning cycle. The analog outputs can be held to any preselected level. The relay outputs can be held individually to any active or inactive state. This is useful for checking and exercising any external devices connected to the analyzer.

Diagnostic Pulse

The analog output is fully scalable over any conductivity or concentration range. Advanced configurations allow pulsing of AO1 during a diagnostic condition.
When the diagnostic pulse is active, the output is modulated for one second out of a six-second repeating cycle to a configuration selectable level ranging from one to 100˚percent of span (0.16 to 16 milliamperes for a four to 20-milliampere output or 0.20 to 20 milliamperes for a zero to 20-milliampere output). Should the actual output of the analyzer be below 12 milliamperes, the pulse will add current; if the actual output is at or above 12 milliamperes, it will subtract current. This provides remote notification of a problem with proper configuration of a digital control system (DCS), programmable logic controller (PLC), or chart recorder.

Temperature Compensation

The TB84EC analyzer is compatible with either Platinum (Pt) 100, three-kilohm Balco resistive temperature device (RTD); or 4.75-kilohm network, ABB proprietary negative coefficient elements. The automatic temperature compensation options are: manual, automatic for Potassium Chloride (KCl), user-entered coefficient in percent per degree Celsius, zero to 15-percent Sodium Hydroxide (NaOH), zero to 20-percent Sodium Chloride (NaCl), zero to 18-percent Hydrochloric acid (HCl), zero to 20-percent Sulfuric acid (H_2SO_4), a user-defined function generator, solution coefficient (zero to 99.9 percent per degree Celsius), and trace acid, trace base, and neutral salt for pure water.

Calibration

Smart key programming makes analyzer calibration accurate and efficient. Process calibration is a straight-forward one-point smart calibration resulting in either a slope adjustment, offset adjustment, or a combination of adjustments. Selecting the reset calibration state results in the calibration defaulting to the original factory calibration. A one-point smart temperature calibration also exists. This calibration adjusts either the temperature slope, offset, or a combination. A special edit calibration state allows manual editing or adjusting of the calibration data.
This feature is especially useful during a startup where a large number of similar loops are being set up and calibrated at the same time. Calibration of the four to 20-milliampere output is allowed via an easy two-point procedure.

Programmable Security Code

The analyzer has a single three-digit security code. Menu-selectable choices allow the security code to be applied to none of or any combination of the following menu choices: calibrate, output/hold, setpoint/tune, and configure.

Specifications

Type: Conductivity analyzer

Input Voltage: 120/240 VAC, 50/60 Hz.

Range: 94 to 276 VAC

Installation category: II

Power Consumption: 17 VA max.

Input Type: ABB 4-electrode conductivity sensors

Input Range:

Conductivity:	0 to 1,999 mS/cm (sensor group dependant)
Concentration:	0.000 to 1,999 digits (engineering units configurable)

Display Resolution:

Conductivity:	0.001 µS/cm, 0.01 µS/cm, 0.1 µS/cm (sensor group dependant)
Concentration:	0.001 digits (configurable)
Temperature:	1°C, 1°F

Temperature Compensation Types: Pt100, 3 kohm Balco, 4.75 kohm RTD

Temperature Compensation

Manual (0.1N KCl based)

Automatic, configurable as:
- Standard (0.1N KCl based)
- Coefficient (0 to 9.99%/°C adjustable)
- 0% to 15% NaOH
- 0% to 20% NaCl
- 0% to 18% HCl
- 0% to 20% H_2SO_4
- Pure water - neutral salt
- Pure water - acid
- Pure water - base
- User-defined

Analog Ouput Ratings

2, completely isolated 0 to 20 mA or 4 to 20 mA outputs, 750 Ω max. load value, AO1 fixed to PV, AO2 configurable to either PV or temperature.

AO1

Conductivity/concentration - isolated 0 to 20 mA or 4 to 20mA, direct or reverse-acting, linear and nonlinear, configurable across full range.

Minimum span:	
Sensor Group A	100.0 µS/cm
Sensor Group B	10.00 µS/cm
Concentration	5% max. concentration range
Maximum span:	
Sensor Group A	1,999 mS/cm
Sensor Group B	1,999 µS/cm
Concentration	1,999 digits

AO2

Conductivity/concentration/temperature (°C or °F) Isolated 0 to 20 mA or 4 to 20 mA, direct or reverse-acting, configurable across full range

Minimum span:	
Sensor Group A	100.0 µS/cm
Sensor Group B	10.00 µS/cm
Concentration	5% max. concentration range
Temperature	10°C, 18°F
Maximum span:	
Sensor Group A	1,999 mS/cm
Sensor Group B	1,999 µS/cm
Concentration	1,999 digits
Temperature	320°C, 576°F

Relay Outputs:
Form C, SPDT relays that are jumper selectable as either normally open or normally closed. Refer to Table 2 to see functionality of each relay output in basic and advanced configurations.

Ratings:

Max. AC capacity values:	100 VA, 240 VAC, 3 A
Max. DC capacity values:	50 W, 24 VDC, 2 A

High and low set points (Basic and Advanced configurations):

Source: Conductivity and concentration

High/low/deadband	Software configurable
Delay value range	00.0 to 99.9 min.

Source: Temperature (°C to °F)

High and low range	-20° to 300°C or -4° to 572°F
Deadband range	0° to 10°C or 0° to 18°F
Delay value range	00.0 to 99.9 min.

High or low cycle timer (Advanced configurations only)

Source: Conductivity and concentration

Turn on range	Software configurable
Cycle time and on time range	00.0 to 99.9 min.

Sensor cleaner (Advanced configurations only):

Cycle time range	00.0 to 99.9 hr
On time range	00.0 to 99.9 min.
Recovery time range	00.0 to 99.9 min.

Nonlinearity and Repeatability:

Conductivity:

Display:	±0.5% of measurement range per decade
Output:	±0.02 mA at full scale output settings
Temperature:	1°C

Maximum Sensor Cable Length

Sensor Group A:	30.5m (100 ft)
Sensor Group B:	15.2 m (50 ft)

Turn on Time 2 secs typical, 4 secs max.

Load Resistance Range (analog outputs)
750 Ω max.

Damping Continuously adjustable from 00.0 to 99.9 secs.

Dynamic Response 3 sec for 90% step change with 00.0 sec damping

Mounting Position Effect None

Environmental

Temperature:

Operating	-20° to 60°C (-4° to 140°F)
Storage	-40° to 70°C (-40° to 158°F)

Humidity (operating and storage):
Will meet specifications to 95% RH

Housing
NEMA 4X and IP65, aluminum alloy with polyester powder coating

Conduit Connection
5 total, 2 each 0.875-in. holes in enclosure that accept 1/2-in. hubs, 3 each 0.600-in. holes that accept PG9 hubs

Size 1/2-DIN
h x w x d 144.0 x 144.0 x 171.0 mm (5.67 x 5.67 x 6.73 in.)

Minimum panel depth: 144.8 mm (5.70 in.)

Max. panel thickness: 9.5 mm (0.38 in.)

Panel cutout: 135.4 (+1.3, -0.8) by 135.4 (+1.3, -0.8) mm (5.33 (+0.05, -0.03) by 5.33 (+0.05, -0.03) in.)

Weight 2.1 kg (4.6 lbs)
3.4 kg (7.5 lbs) with pipe mounting hardware

Agency Certifications

CSA:

Class I;	Division 2	Groups A, B, C, and D
Class II;	Division 2	Groups E, F, and G
Class III;	Division 2	

FM: Nonincendive

Class I;	Division 2	Groups A, B, C, and D
Class II;	Division 2	Groups F and G
Class III;	Division 2	

EMC Requirements

CE certified - complies with all applicable European Community product requirements, specifically those required to display the CE marking on the product nameplate.

Installation Accessories

Kit Number	Description
4TB9515-0123	Panel mounting kit
4TB9515-0124	Pipe mounting kit
4TB9515-0125	Hinge mounting kit
4TB9515-0156	Wall mounting kit
4TB9515-0165	Cable grip for ½-in. hubs
4TB9515-0191	Cable grip for PG9 hubs
4TB9515-0198	Complete cable grip kit (2 each ½-in. and 3 each PG3)

Installation and Wiring Diagrams

Figures 1, 2, 3, 4, and 5 show the installation and wiring diagrams

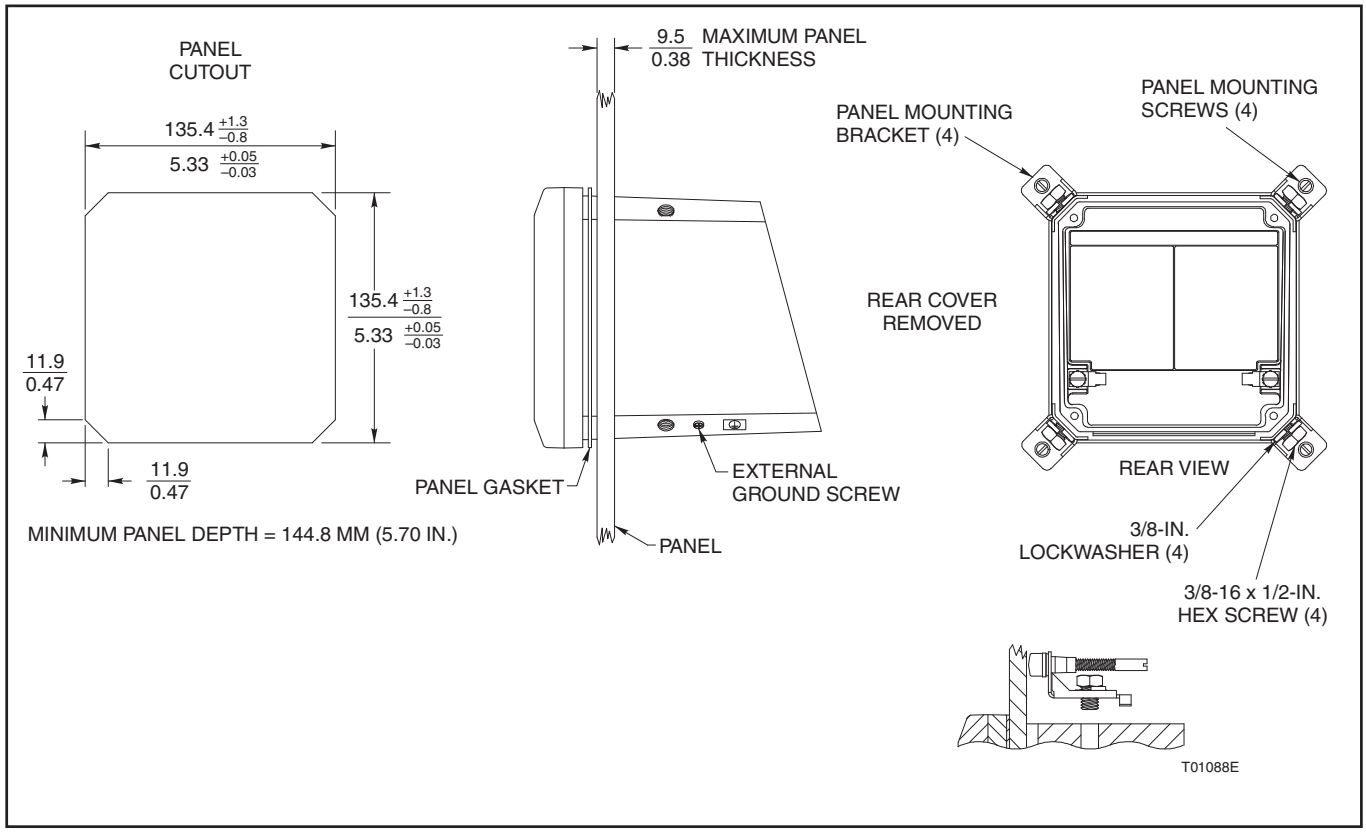

Figure 1. Panel Mounting

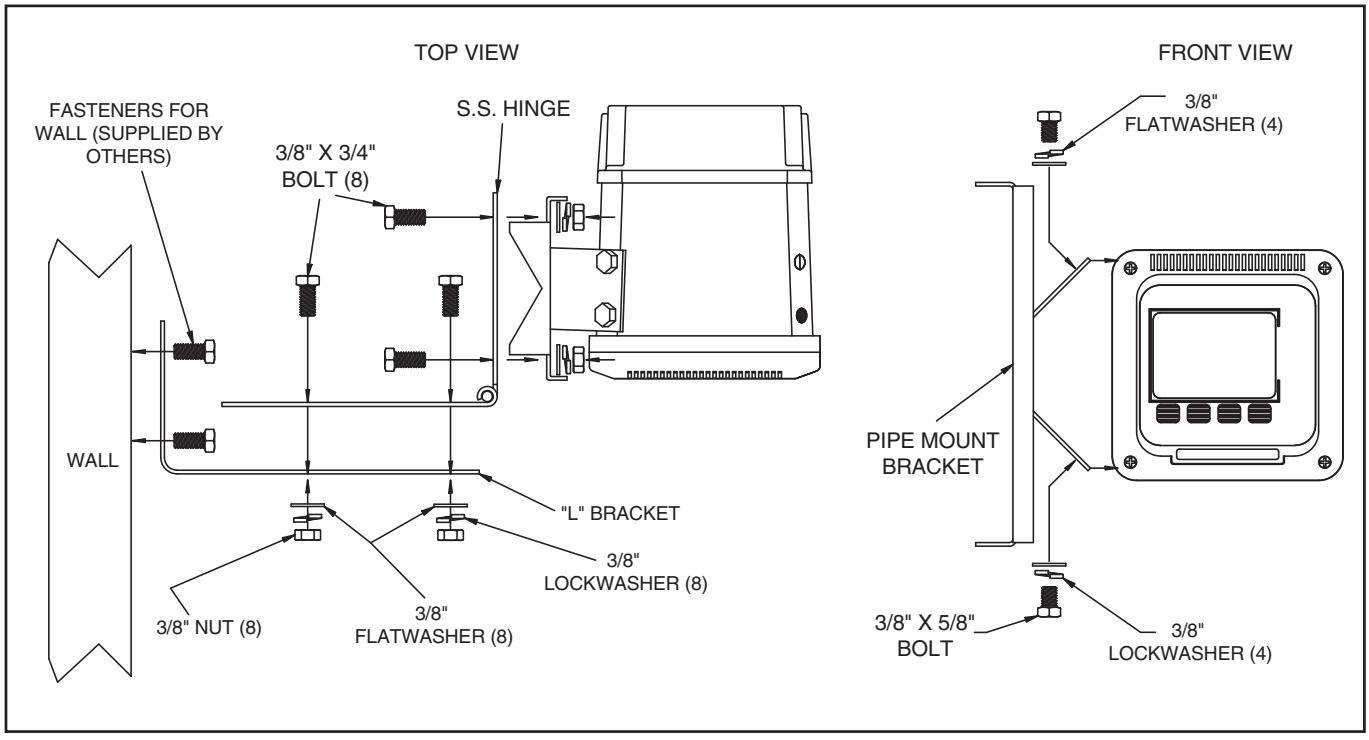

Figure 2. Hinge/Wall (Rear) Mounting

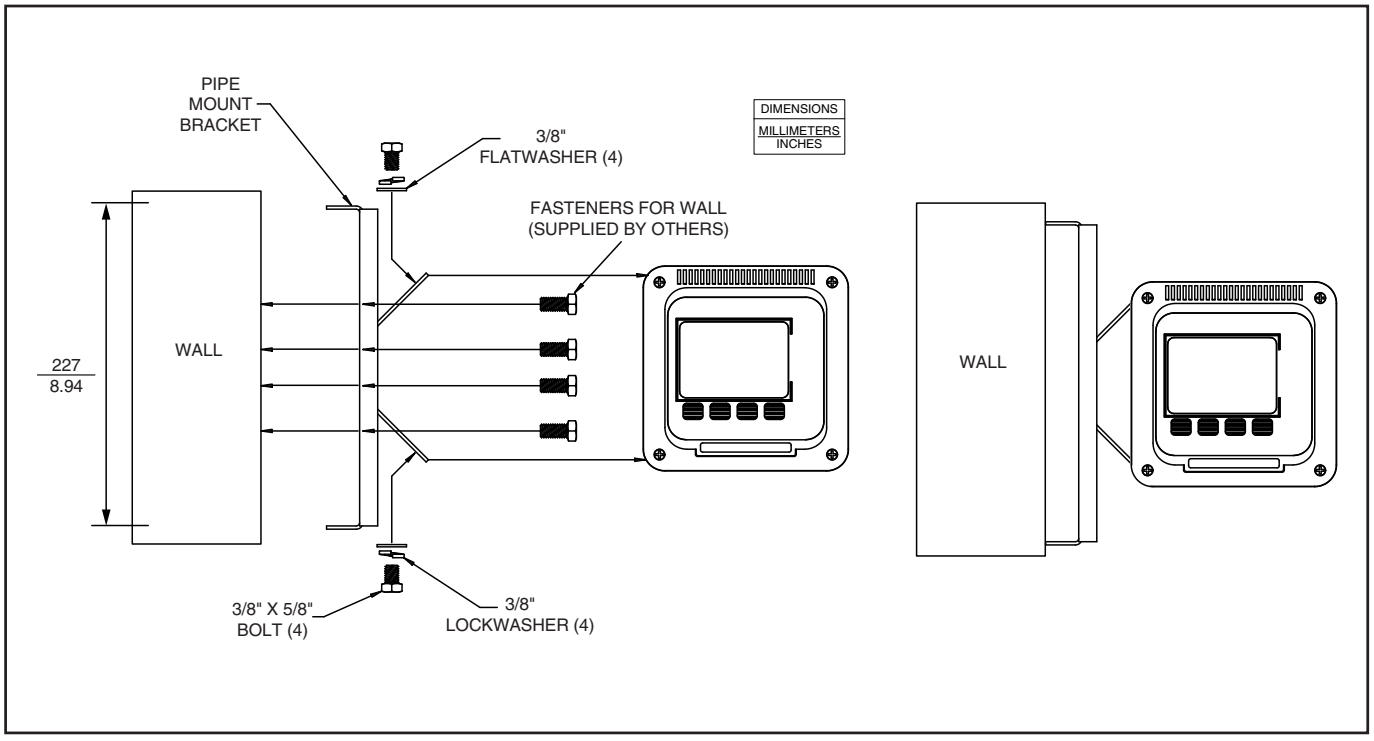

Figure 3. Wall (Side) Mounting

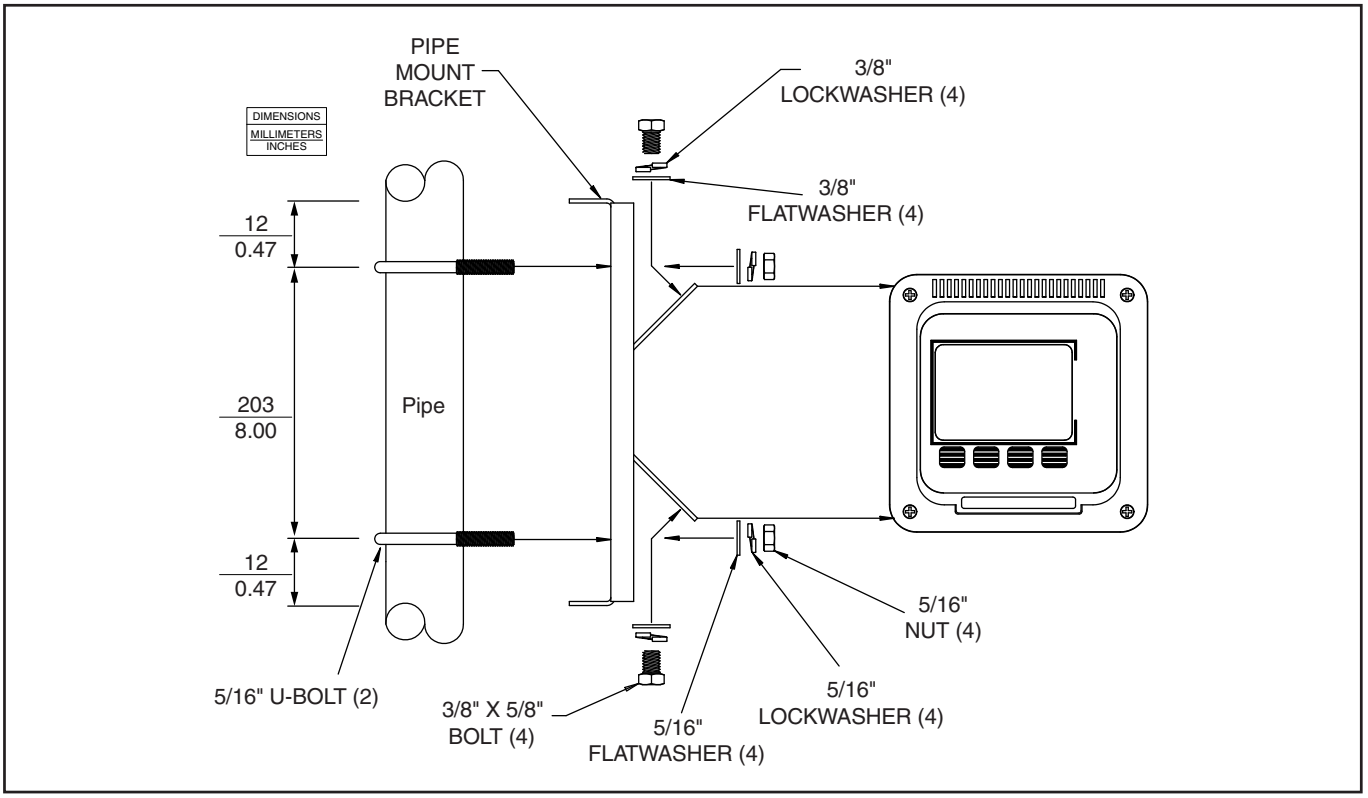

Figure 4. Pipe Mounting

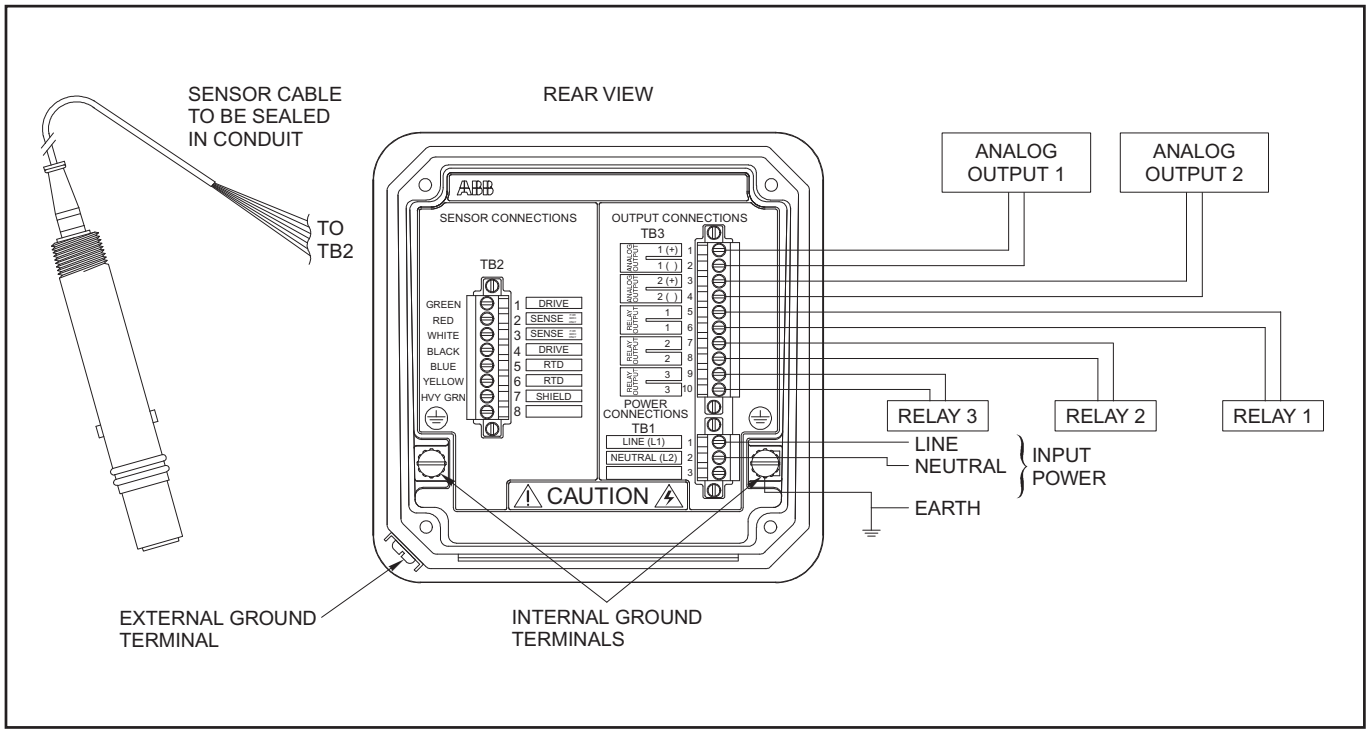

Figure 5. Wiring

Ordering Information Model Code	**T B 8 4** 01 - 04	05	06	07	**0** 08	**0** 09	**0** 10	11	12	13
Advantage Series Analyzer (Note 3)										
Input										
Conductivity four-electrode (Note 2)		**E**	**C**							
Conductivity two-electrode (Note 2)		**T**	**E**							
Toroidal conductivity (Note 2)		**T**	**C**							
Programming Options										
Basic				1						
Advanced (Note 1)				2						
Reserved										
For future use					0					
Reserved										
None						0				
Housing Type										
Anodized aluminum, powder coat polyester							0			
Mounting Hardware										
None								0		
Pipe (4TB9515-0124)								1		
Hinge (4TB9515-0125) For Pipe or Wall								2		
Panel (4TB9515-0123)								3		
Wall (4TB9515-0156)								4		
Agency Approval										
None									0	
FM (Factory Mutual)									1	
CSA (Canadian Standards Association)									2	
Identification Tags										
None										0
Stainless Steel (4TB5003-0007)										1
Mylar										2

NOTES:

1. *See TB84EC/TE/TC product specification sheets for details on Advanced programming options.*
2. *Cable grip available separately, part number 4TB9515-0165*
3. *One instruction manual included. Additional copy, part number 4TB9800-84TC, 4TB9800-84EC or 4TB9800-84TE.*

Contact us

ABB Inc.
Process Automation
843 N Jefferson Street
PO Box 831
Lewisburg 24901-9509
USA
Tel: +1 800 HELP 365 (435 7365)
Fax: +1 304 647 1862

ABB Limited
Process Automation
Oldends Lane
Stonehouse
Gloucestershire GL10 3TA
UK
Tel: +44 1453 826 661
Fax: +44 1453 829 671

ABB Engineering (Shanghai) Ltd.
Process Automation
No. 5, Lane 369, Chuangye Road
201319, Shanghai,
P.R. China
Phone: +86 (0) 21 6105 6666
Fax: +86 (0) 21 6105 6992
Mail:china.instrumentation@cn.abb.com

www.abb.com

SEITA
Servicios Especializados de Ingeniería en Tecnología y Automatización

SEITA S.A.S.
Calle 4 # 25-47 Of. 204
Cali, Colombia
Tel. (57-2) 554-5540

www.seita.com.co

Note
We reserve the right to make technical changes or modify the contents of this document without prior notice. With regard to purchase orders, the agreed particulars shall prevail. ABB does not accept any responsibility whatsoever for potential errors or possible lack of information in this document.

We reserve all rights in this document and in the subject matter and illustrations contained therein. Any reproduction, disclosure to third parties or utilization of its contents in whole or in parts – is forbidden without prior written consent of ABB.

Copyright© 2011 ABB
All rights reserved

3KXA112801R1001

DS/TB84EC–EN Rev. C 10.2011

Power and productivity
for a better world™