Data sheet DS/TB84TC–EN Rev. C

TB84TC
Conductivity transmitter
Toroidal

Hazardous area rated transmitter for use with TB404 sensors



Smart key menu programming

Two fully programmable isolated outputs
— Zero to 20 mA/four to 20 mA

Three fully programmable relay outputs

Concentration analyzer
— Predefined and user-defined configurations

Back-lit display for easy viewing

Adjustable damping

Hold output function
— Holds all outputs or any individual output

Programmable security codes and configuration lockout

Universal power supply
— 120/240 VAC, 50/60 Hz. Voltage range is 94 to 276 VAC

NEMA 4X/IP65 housing
— Cast aluminum with corrosion resistant polyester powder coat finish

FM and CSA non-incendive agency approvals
— CE Mark

SEITA
Servicios Especializados de Ingeniería en Tecnología y Automatización
www.seita.com.co

The ABB TB84TC Advantage™ Toroidal Conductivity Analyzer is a unique and advanced microprocessor-based instrument. Smart keys on the front panel provide local programming of all analyzer functions. Easy-to-follow instructions appear above each smart key. A secondary display clearly defines each menu option during programming. When the analyzer is in the normal operating mode, the secondary display shows several useful parameters. This innovative, user-friendly interface provides straightforward analyzer operation, configuration, and calibration. Standard outputs include two isolated analog (current) outputs and three relay outputs. The analog outputs can be configured for the process variable (PV) and/or temperature. The relay outputs can be configured for the PV, temperature, diagnostics, cycle timer controller, or sensor cleaner.

The TB84TC analyzer is compatible with all ABB Model TB404 Toroidal Conductivity Sensors. It automatically measures and autoranges from 400 microsiemens per centimeter to 1,999 millisiemens per centimeter without any configuration or jumper changes. Toroidal sensors provide accurate conductivity measurements in fouling or corrosive solutions. Encapsulating the sensor in polyether-ether ketone (PEEK) ensures the chemical resistance and durability of the sensor.

Flexible sensor mounting options include submersible, inline, ball valve insertion, and high pressure ball valve insertion. Chemically resistant sensor material choices include chlorinated polyvinyl chloride (CPVC), 316 stainless steel, Kynar®, and titanium.

The TB84TC analyzer meets current CE, NEMA 4X, and IP65 requirements.

Toroidal Sensor Compatibility

Model TB404 Toroidal Conductivity sensors are designed to measure from 400 microsiemens per centimeter to 1,999 millisiemens per centimeter. The TB84TC analyzer automatically autoranges across this full range.

Toroidal Sensor Ranges

Model TB404 Toroidal Conductivity Sensors are designed to provide inputs from 400 microsiemens per centimeter to 1,999 microsiemens per centimeter to the autoranging TB84TC analyzer.

Basic or Advanced Programming

The Basic or Advanced programming mode can be chosen at the time of purchase. The Advanced mode has an expanded set of functions intended for complex applications. Separating the Basic and Advanced modes simplifies setup and calibration activities. The Advanced configuration choices are:

- ***Preprogrammed concentration analyzer:*** Preprogrammed for 0 to 15% sodium hydroxide (NaOH), 0 to 20% sodium chloride (NaCl), 0 to 18% hydrochloric acid (HCl), and 0 to 20% sulfuric acid (H_2SO_4).

- ***User-defined concentration analyzer:*** User-defined through a six-point conductivity versus concentration linear curve fit where output follows concentration. Engineering unit choices are percent (%), parts per million (ppm), parts per billion (ppb), and user-defined.

- ***Temperature compensation types:*** Manual (0.1N KCl based), automatic configurable as: standard (0.1N KCl based), user-defined solution coefficient (0 to 9.99%/°C), 0 to 15% NaOH, 0 to 20% NaCl, 0 to 18% HCl, 0 to 20% H_2SO_4, and a user-defined function generator.

- ***Analog pulse diagnostic output.***

- ***Nonlinear output:*** User-defined through a six-point conductivity versus desired current output that best fits the nonlinear relationship.

- ***Expanded relay functions and flexibility.***

Analog Outputs

The analyzer has two isolated analog outputs (AO1 and AO2). Each is user-configurable as either a zero to 20 or a four to 20-milliampere signal. AO1 is dedicated to the PV while AO2 is configurable for either the PV or temperature. A two-point calibration method applies to both analog outputs. This allows adjustment of the analog outputs to compensate for other devices in the loop that may not be calibrated. Entering the PV or temperature endpoints in reverse order allows for reverse-acting outputs.

A capacitive type lag, applied via the damping function, is useful in process environments where noise is present. Damping is supported for both analog outputs and the displayed PV, and has a maximum value of 99.9 seconds. One damping value affects both analog outputs and the displayed PV in basic configurations. Individual damping values affect each analog output and the displayed PV in advanced configurations.

Relay Outputs

The analyzer has three relay outputs available (RO1, RO2, RO3). Each is jumper selectable as either normally open (NO) or normally closed (NC). *RELAY*, followed by the corresponding relay number, appears on the display when a relay activates. The functionality of each relay output depends on the configuration mode. **Table 1** shows the possible functionality of each relay output for basic and advanced configurations. Advanced programming allows all function choices shown in **Table 1** for each of the three relay outputs[1].

Table 1. Relay Output Functionality[1]

Function	RO1		RO2		RO3	
	Basic	Adv	Basic	Adv	Basic	Adv
High or low PV alarm	•	•	•	•	•	•
High or low temperature alarm (ºC or ºF)		•	•	•	•	•
Diagnostics alarm		•		•	•	•
High or low cycle timer		•		•		•
Sensor cleaner[2]		•		•		•

Notes:

1. • = available

2. If a relay output has been configured as a sensor cleaner, no other relay output can be used for this function

High and low alarms can be chosen for the PV and temperature in either degrees Celsius or degrees Fahrenheit. Each has a user-selectable deadband and time delay designed to control relay functions and prevent problems like relay chatter. The diagnostic relays are linked to all diagnostic conditions. The high and low cycle timer has adjustable set points, cycle time, and on time. The cycle timer allows a waiting period to see the results of chemical addition by interrupting the feed. The sensor cleaner feature provides for cycle time, on time, and recovery time programming. This makes set up and operation of the analyzer with the ABB hydraulic sensor cleaner or Model TB18 Safe-T-Clean® Sensor Valve easy and trouble free.

Diagnostics

The TB84TC analyzer constantly monitors both the sensor and the analyzer. This helps to ensure reliability and accuracy. Upon detection of a diagnostic condition, the analyzer provides diagnostic notification by flashing *FAULT* on the display and supplying a pulse on AO1 (if activated). Pressing the *FAULT info* smart key stops *FAULT* from flashing and provides, on the secondary display, a short description and fault code. *FAULT* remains on until resolution of the problem. Faults that activate the diagnostic notification include, but are not limited to shorted or open temperature compensator, PV and temperature over or under range, and slope and offset checks.

Hold Output

The analyzer has a hold output state that improves plant safety and process integrity during maintenance and calibration. When activated, *HOLD* appears at the top of the display. Upon release of the hold state, *HOLD* disappears. The analog outputs can be held to any preselected level. The relay outputs can be held individually to any active or inactive state. This is useful for checking and exercising any external devices connected to the analyzer. When the sensor cleaner option is chosen, the analyzer provides the option of holding all analog and relay outputs during the cleaning cycle.

Hold Output

The analyzer has a hold output state that improves plant safety and process integrity during maintenance and calibration. When activated, *HOLD* appears at the top of the display. Upon release of the hold state, *HOLD* disappears. The analog outputs can be held to any preselected level. The relay outputs can be held individually to any active or inactive state. This is useful for checking and exercising any external devices connected to the analyzer. When the sensor cleaner option is chosen, the analyzer provides the option of holding all analog and relay outputs during the cleaning cycle.

Diagnostic Pulse

The analog output is fully scalable over any conductivity range. Advanced configurations allow pulsing of AO1 during a diagnostic condition.

When the diagnostic pulse is active, the output is modulated for one second out of a six-second repeating cycle to a configuration selectable level ranging from one to 100 percent of span (0.16 to 16 milliamperes for a four to 20-milliampere output or 0.20 to 20 milliamperes for a zero to 20-milliampere output). Should the actual output of the analyzer be below 50 percent, the pulse will add current; if the actual output is at or above 50 percent, it will subtract current. This provides remote notification of a problem with proper configuration of a digital control system (DCS), programmable logic controller (PLC), or chart recorder.

Temperature Compensation

The TB84TC analyzer is compatible with either Pt˚100, PT˚1000, or three-kilohm Balco temperature compensators. The automatic temperature compensation options are: manual, automatic for potassium chloride (KCl), user-entered coefficient in percent per degree Celsius, a user-defined function generator, and zero to 15-percent NaOH, zero to 20-percent NaCl, zero to 18-percent HCl, and zero to 20-percent H_2SO_4.

Calibration

Smart key programming makes analyzer calibration accurate and efficient. Process calibration is a straightforward two-point smart calibration with the zero-point calibration resulting in an offset adjustment and a span-point calibration resulting in a span adjustment. Selecting the reset calibration state results in the calibration defaulting to the original factory calibration. A one-point smart temperature calibration also exists. This calibration adjusts either the temperature slope, offset, or a combination. A special edit calibration state allows manual editing or adjusting of the calibration data. Calibration of the zero to 20-milliampere or four to 20-milliampere output is allowed via an easy two-point procedure.

Programmable Security Code

The analyzer has a single three-digit security code. Menu-selectable choices allow the security code to be applied to none of or any combination of these menu choices: calibrate, output/hold, setpoint/tune, and configure.

Specifications

Type Toroidal conductivity analyzer

Input Voltage 120/240 VAC, 50/60 Hz

Range 94 to 276 VAC

Installation
Category: II

Power Consumption 17 VA max.

Input Type
ABB Model TB404 Toroidal Conductivity Sensors

Input Range
Conductivity: 400 µS/cm to 1,999 mS/cm
Concentration: 0.000 to 1,999 digits (engineering units configurable)

Display Resolution
Conductivity: 1 µS/cm
Concentration: 0.001 digits (configurable)
Temperature: 1°C, 1°F

Temperature Compensation Types
Pt 100, Pt 1000, 3-kΩ Balco

Temperature Compensation
Manual (0.1N KCl based)

Automatic, configurable as: standard (0.1N KCl based), user-defined coefficient (0 to 9.99%/°C), user-defined function generator, 0 to 15% NaOH, 0 to 20% NaCl, p to 18% HCl, 0 to 20% H_2SO_4

Analog Output Ratings
2, completely isolated p to 20 mA/4 to 20 mA outputs, 750 Ω max. load value, AO1 fixed to PV, AO2 configurable to either PV or temperature.

AO1
Conductivity/concentration - Isolated p to 20 mA/4 to 20 mA, direct or reverse-acting, linear and nonlinear, configurable across full range.

Minimum span:
Conductivity: 100.0 µS/cm
Concentration: 5% max. concentration range
Maximum span:
Conductivity: 1,999 mS/cm
Concentration: 1,999 digits

AO2

Conductivity/concentration/temperature (°C or °F) - Isolated 0 to 20 mA/4 to 20 mA, direct or reverse-acting, configurable across full range.

Minimum span:

Conductivity:	100.0 µS/cm
Concentration:	5% max. concentration range
Temperature:	10°C, 18°F

Maximum span:

Conductivity:	1,999 mS/cm
Concentration:	1,999 digits
Temperature:	300°C, 540°F

Relay Outputs

Form C, SPDT relays that are jumper selectable as either NO or NC. Refer to Table 1 to see the functionality of each relay output in Basic and Advanced configurations.

Ratings:

Max. AC capacity	100 VA, 240 VAC, 3 A
Max. DC capacity	50 W, 24 VDC, 2 A

High and low set points (Basic and Advanced configurations):

Source: Conductivity and concentration

High/low/deadband	Software configurable
Delay value range	00.0 to 99.9 min.

Source: Temperature (°C or °F)

High and low range	0° to 300°C or 32° to 572°F
Deadband range	0° to 10°C or 0° to 18°F
Delay value range	00.0 to 99.9 min.

High or low cycle timer (Advanced configurations only):

Source: conductivity and concentration

Turn on range	Software configurable
Cycle time and on time range	00.0 to 99.9 min.

Sensor cleaner (Advanced configurations only):

Cycle time range	00.0 to 99.9 hr.
On time range	00.0 to 99.9 min.
Recovery time range	00.0 to 99.9 min.

Nonlinearity

Conductivity:

Display	±0.1% full scale
Output	±0.02 mA at full scale output settings
Temperature:	1°C

Repeatability

Conductivity:

Display	±0.5% full scale
Output	±0.02 mA at full scale output settings
Temperature:	1°C

Maximum Sensor Cable Length
15 m (50 ft.)

Turn On Time
2 secs typical, 4 secs max.

Load Resistance Range (analog outputs)
750 Ω max.

Damping
Continuously adjustable from 00.0 to 99.9 secs

Dynamic Response
3 sec for 90% step change with 00.0 sec damping

Mounting Position Effect None

Environmental

Temperature:

Operating	-20° to 60°C (-4° to 140°F)
Storage	-40° to 70°C (-40° to 158°F)

Relative Humidity (operating and storage):
Will meet specifications to 95%

Housing

NEMA 4X/IP65, aluminum alloy with corrosion resistant polyester powder coating

Conduit Connection

5 total, 2 each 0.875-in. holes in enclosure that accept 1/2-in. hubs, 3 each 0.600-in. holes that accept PG9 hubs.

Size (1/2 DIN)

h x w x d:	144.0 x 144.0 x 171.0 mm (5.67 x 5.67 x 6.73 in.)
Min. panel depth:	144.8 mm (5.70 in.)
Max. panel thickness:	9.5 mm (0.38 in.)
Panel cutout:	135.4 (+1.3, -0.8) by 135.4(+1.3, -0.8) mm (5.33 (+0.05, -0.03) by 5.33 (+0.05, -0.03) in.)

Weight 2.1 kg (4.6 lbs),
3.4 kg (7.5 lbs)
with pipe mounting
hardware

Agency Certifications

CSA:

Class I;	Division 2, Groups A, B, C and D
Class II;	Division 2, Groups E, F and G
Class III;	Division 2

FM: Nonincendive

Class I;	Division 2, Groups A, B, Cand D
Class II;	Division 2, Groups F and G
Class III;	Division 2

EMC Requirements

CE certified - complies with all applicable European Community product requirements, specifically those required to display the CE marking on the product nameplate.

Specifications subject to change without notice.

INSTALLATION ACCESSORIES TABLE

Number	Description
4TB9515-0123	Panel mounting kit
4TB9515-0124	Pipe mounting kit
4TB9515-0125	Hinge mounting kit
4TB9515-0156	Wall mounting kit
4TB9515-0165	Cable grip for ½-in. hubs
4TB9515-0191	Cable grip for PG9 hubs
4TB9515-0198	Complete cable grip kit (2 each ½-in. and 3 each PG9)

Wiring and Installation Diagrams

Figures 1, 2, 3, 4, and 5 show the wiring and installation diagrams.

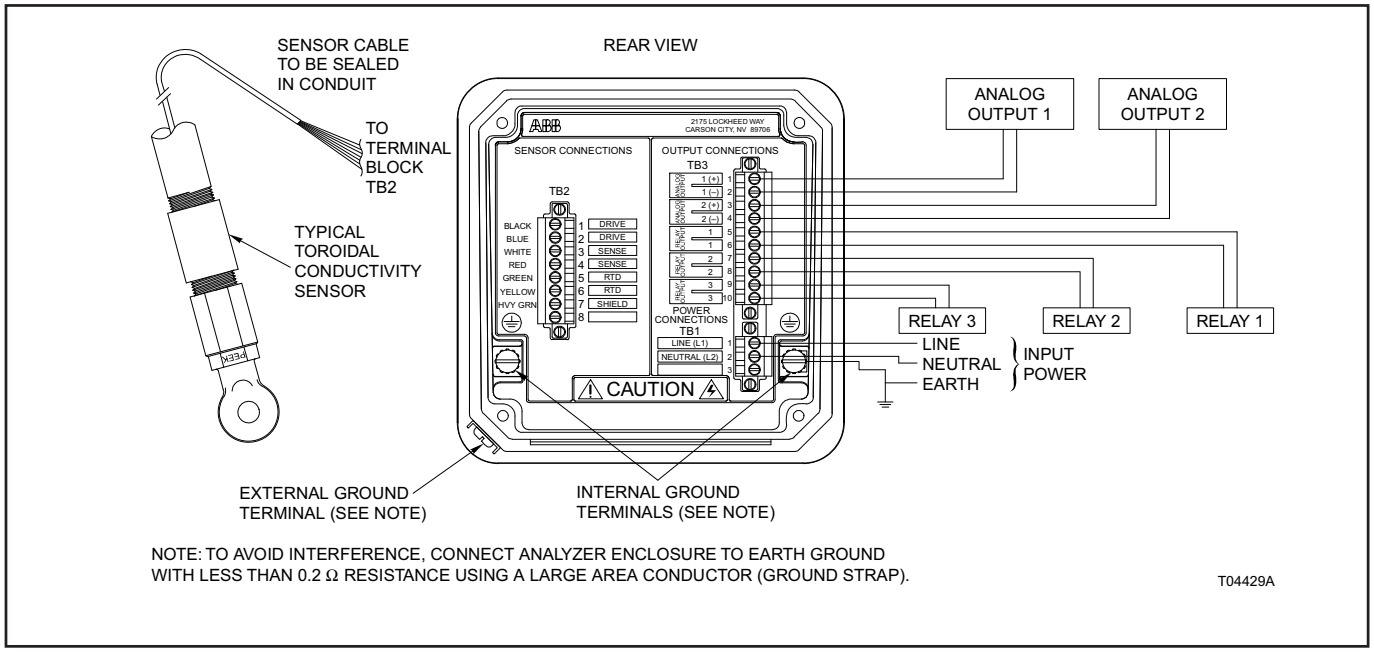

Figure 1. Wiring

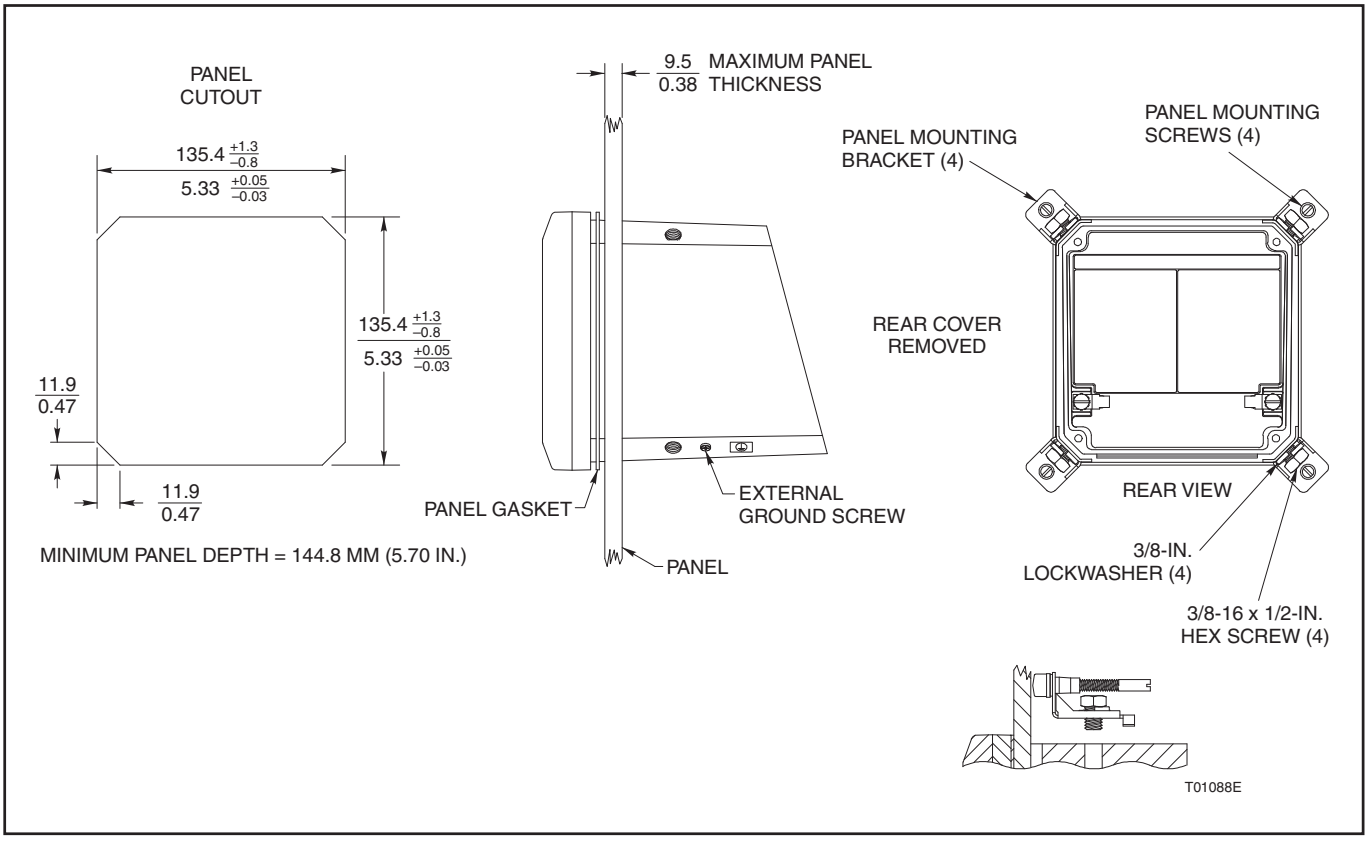

Figure 2. Panel Mounting

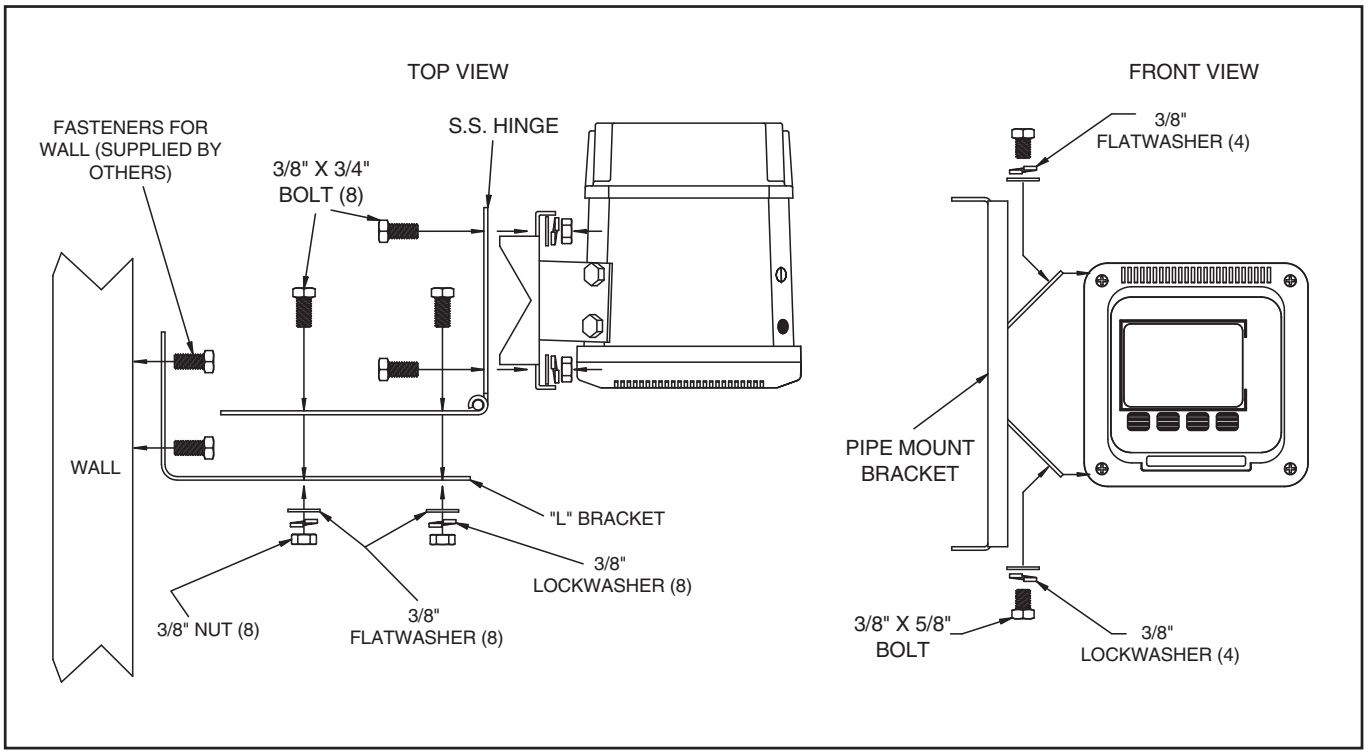

Figure 3. Wall/Hinge (Rear) Mounting

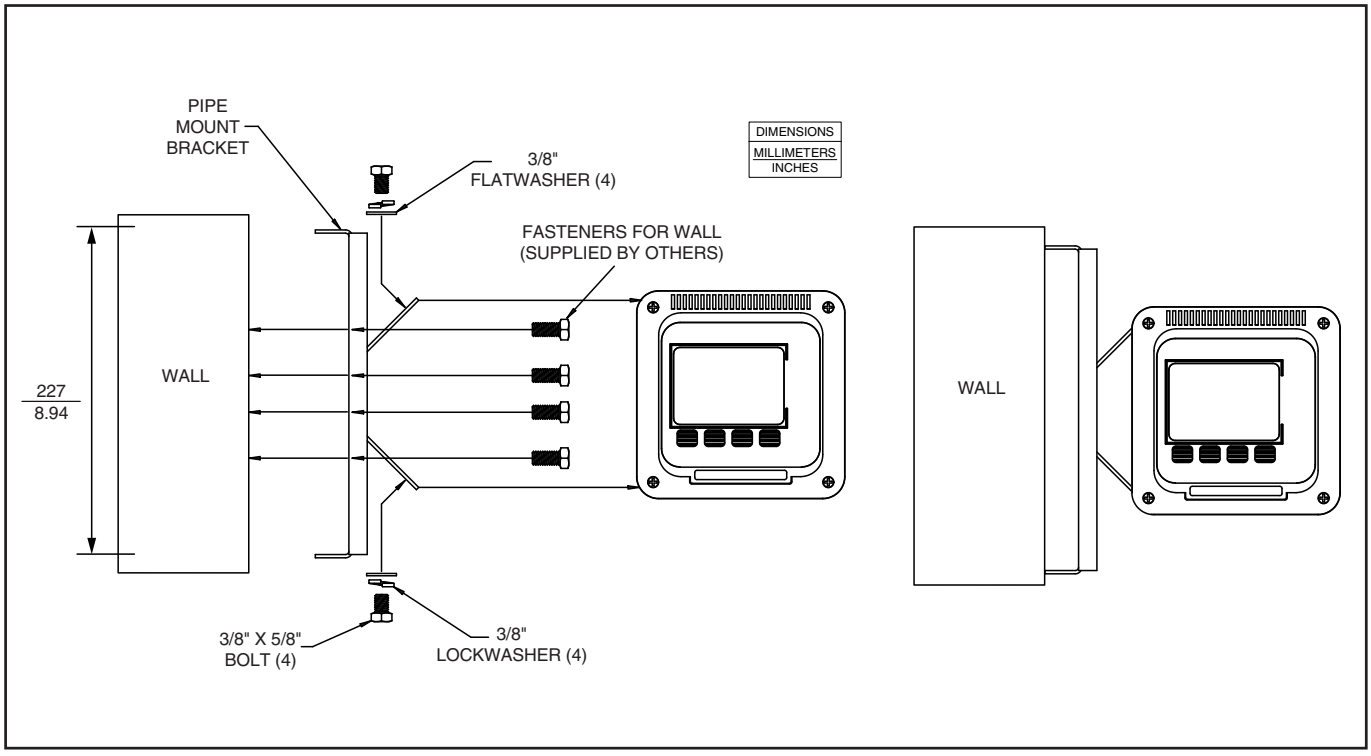

Figure 4. Wall (Side) Mounting

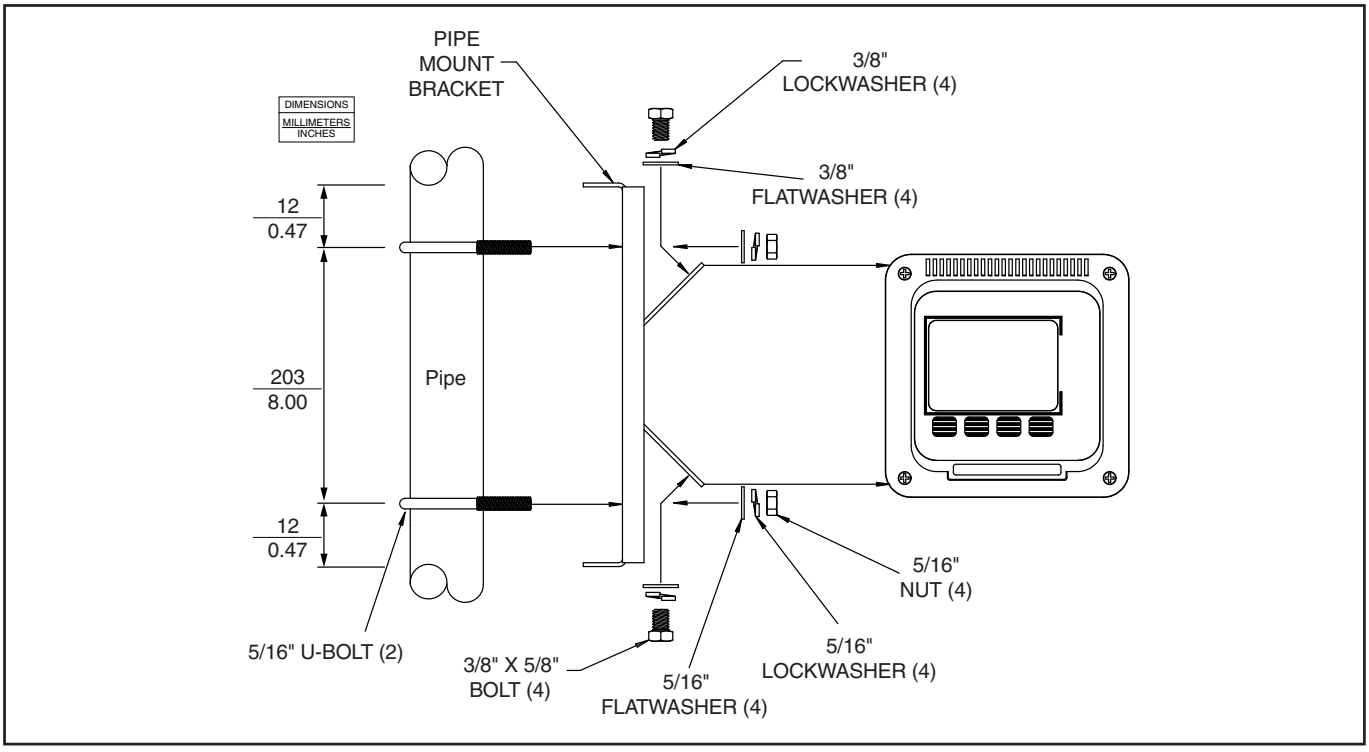

Figure 5. Pipe Mounting

Ordering Information Model Code	**T B 8 4** 01 - 04	05	06	07	**0** 08	**0** 09	**0** 10	11	12	13
Advantage Series Analyzer (Note 3)										
Input										
Conductivity four-electrode (Note 2)		**E**	**C**							
Conductivity two-electrode (Note 2)		**T**	**E**							
Toroidal conductivity (Note 2)		**T**	**C**							
Programming Options										
Basic				1						
Advanced (Note 1)				2						
Reserved										
For future use					0					
Reserved										
None						0				
Housing Type										
Anodized aluminum, powder coat polyester							0			
Mounting Hardware										
None								0		
Pipe (4TB9515-0124)								1		
Hinge (4TB9515-0125) For Pipe or Wall								2		
Panel (4TB9515-0123)								3		
Wall (4TB9515-0156)								4		
Agency Approval										
None									0	
FM (Factory Mutual)									1	
CSA (Canadian Standards Association)									2	
Identification Tags										
None										0
Stainless Steel (4TB5003-0007)										1
Mylar										2

NOTES:

1. *See TB84EC/TE/TC product specification sheets for details on Advanced programming options.*
2. *Cable grip available separately, part number 4TB9515-0165*
3. *One instruction manual included. Additional copy, part number 4TB9800-84TC, 4TB9800-84EC or 4TB9800-84TE.*

Contact us

ABB Inc.
Process Automation
843 N Jefferson Street
PO Box 831
Lewisburg 24901-9509
USA
Tel: +1 800 HELP 365 (435 7365)
Fax: +1 304 647 1862

ABB Limited
Process Automation
Oldends Lane
Stonehouse
Gloucestershire GL10 3TA
UK
Tel: +44 1453 826 661
Fax: +44 1453 829 671

ABB Engineering (Shanghai) Ltd.
Process Automation
No. 5, Lane 369, Chuangye Road
201319, Shanghai,
P.R. China
Phone: +86 (0) 21 6105 6666
Fax: +86 (0) 21 6105 6992
Mail:china.instrumentation@cn.abb.com

www.abb.com

Note
We reserve the right to make technical changes or modify the contents of this document without prior notice. With regard to purchase orders, the agreed particulars shall prevail. ABB does not accept any responsibility whatsoever for potential errors or possible lack of information in this document.

We reserve all rights in this document and in the subject matter and illustrations contained therein. Any reproduction, disclosure to third parties or utilization of its contents – in whole or in parts – is forbidden without prior written consent of ABB.

Copyright© 2011 ABB
All rights reserved

3KXA112803R1001

DS/TB84TC–EN Rev. C 10.2011

Power and productivity
for a better world™